

W ˚ س : 1

1.1 1

1.2 ˇ : 1

1.3 نجى 2

H ..... 28651 ..... 28651 ..... 3B651 2

1.1

ȁ ˇ	
	ί ˍ ˧ ȁ ȁ ˍ ˇ ˘ ɨɕ ĭ ˆ 23 Ṇ˜ Į̆˘ ‰ ≤ ±0.5s/d
ˇ	
˧	˥ ת ĭ ŭ ˧ ת ɨɕ ɐ
Ḥ ȁ	
Ḥ	3 ˜ ˘ ˘ ṗ
	1 ɕɕ Ŧ˘ ˥ ˜ ʟ Ŧ

1.3

ɨɕ :

ɨɕ	ˇ

2.1

[illegible]

[illegible]



[illegible]

2.2

2.2.1 [illegible]

[illegible]

2.2.2 [illegible]

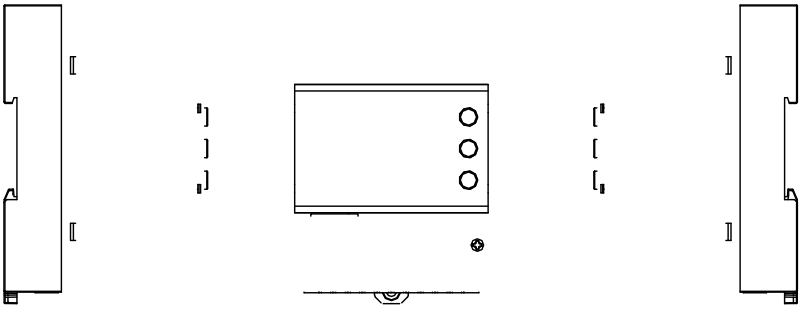

2.2.3

1 ã 35mm ‰ DIN ’

2 ã 3 ɢ M3 K ɸi ˘ ï ʳ Ĭ ɸ Â

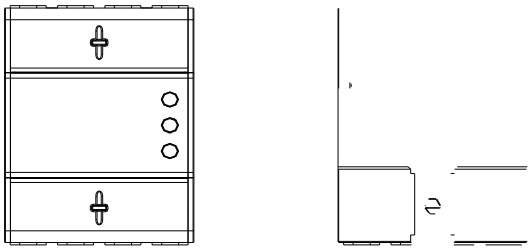

2.3

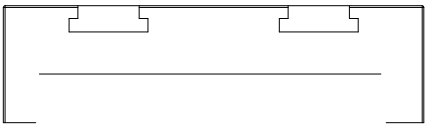



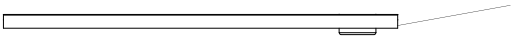

2.4.2 J /

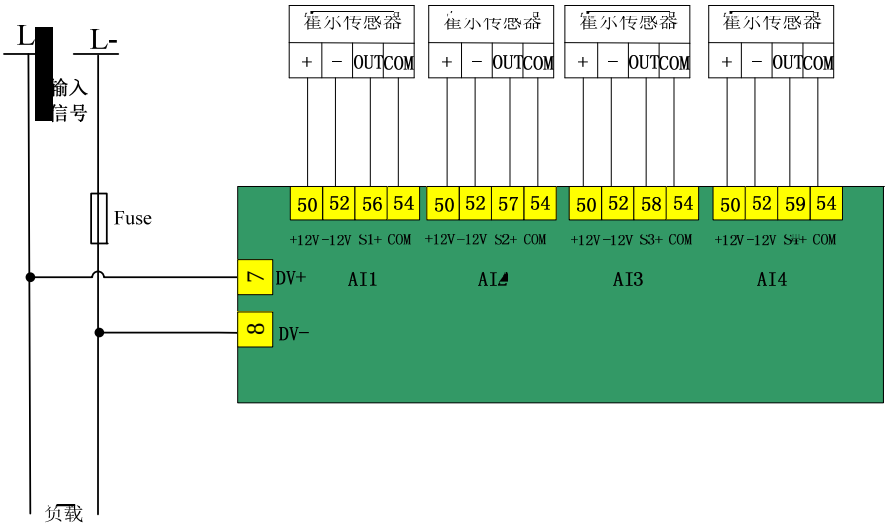

50 51 52 53 54 55

2.4.3 ‖ Ŧ

ת ť 1 ˇ ‖ Ŧ˜ h ɢ ˇ ˘ ‖ ч 80ms±20ms Â ‖ ǫ̈ Ϫ Ŧ Â

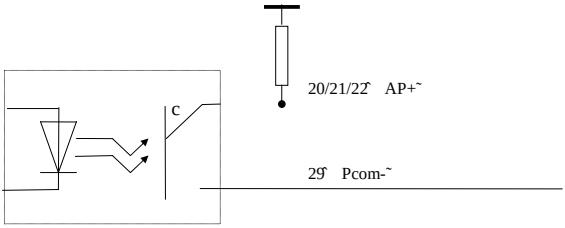

1. 4 1-4 1

1

2. Vcc 5V 12V 24V Vcc/5mA k

2.4.4

RS-485 Ḥ ˝Ḥ w̄ ◌ 32 ך ת ˘ Ḥ ך ץ ť ˘ ь 1200 ˘ Ɵ ɢ

RS-485 ʾ A˜ ˜ ȁ B˜ ˜ Â ť ˘ خي ì w̄ ɢ 120Ω ץ Ḥ ך Â

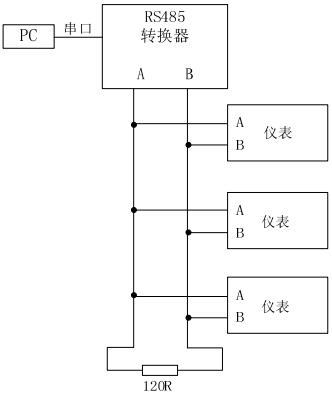

2.4.5 ˜ ˜

3 ˜ ˜˘ ч DI1 à DI2 à DI3 à DIcom˘ ɢ Â ṗ w̄ ɢ 12V

˘ ɢ Â

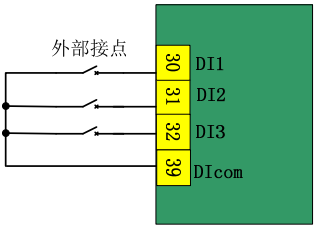

2.4.6 ᴇᴇ Ŧ

1 ɢ ᴇᴇ ᴇᴇ˘ ч DO˘ ᴇ ℗ 250VAC/5A 30VDC/5A Â ˘

ᵗ Ţ ᴇᴇ Â

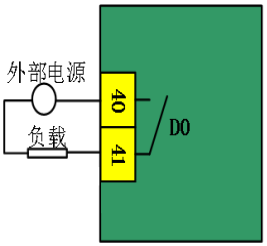

2.5



1) ˜ ˩ ᴇᴇ ˩ ᴇᴇ ʏ ṗ Â

2) ˩ ˜ ᴇᴇ ᴇᴇ ᴇᴇ ᴇ Ḡ Â

3.1

3 ɢ ˘ №≠ ▲ ˘ ▼ ˘ SET ˘ ί r ˇ Й ˛

	ʅ	ˇ
▲	Ʊ ̛ ̛	1 ǎ ˘ Ʊ ̛ ̛ ˛ 2 ǎ ˘ ي ǐ ˘ Ŧ ʅ ˛ 3 ǎ ˘ ي ˘ β ̮ Â
▼	Ʊ Й ̛	1 ǎ ˘ Ʊ Й ̛ ˛ 2 ǎ ˘ ي ǐ ˘ ˛ 3 ǎ ˘ ي ˘ β ṿ ⁞ Â
SET		1 ǎ ˘ ˜ ǐ ˛ 2 ǎ ˘ ي ǐ ˘ ˜ ˛ 3 ǎ ˘ ي ˘ Ḡ ˛

3.2

˛





1路组合总电能



1路尖时段电能



1路峰时段电能

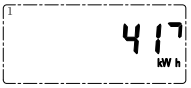



ModBus通讯地址

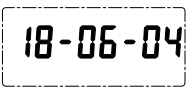

系统日期



系统时间

1 ⌒ RS485

2 “1” “2” “3” “4” 1 2 3 4

3.2.3

ˇ M1~M4ˊ ˘ ˘ ˇ ˘ Ь ˈ

ˊ ˇ Â

3.2.4 ĭ

خي Ţ κ w̄ Й˘ SET ˥ ˜ ĭ شحشم“Adr 001”˘ Ъ Й ▼ ˥ ˛ ä

˘ هج ˈ ˛ ä IP شحشم ä ä ä ä ä ı ä ⅃ı ä / β ˘

ĭ ˘ خي SET ˘ ˜ “Pd 0000”˘ ˜ “Pd 2000”˘ SET ˘ ˜ Ϫ ḱ ĭ

˘ ↕ ˥ ɣ ĭ ˘ خي ˜ Ϫ ì ı Ь ˈP ˜ Â

خي ĭ ˘ 60 ṗ κ ᵥ ˛ ƀ˘ ˛ نج Â

˥ ĭ ˊ

˛	ĭ	ɋ ɥ	˥ شم	Ŧ ⅃
0	Pd 0000		2000	ɯ 2000ˊ Ь ˥
1	ñAdr 001	ModBus شحشم	1~247	001 1

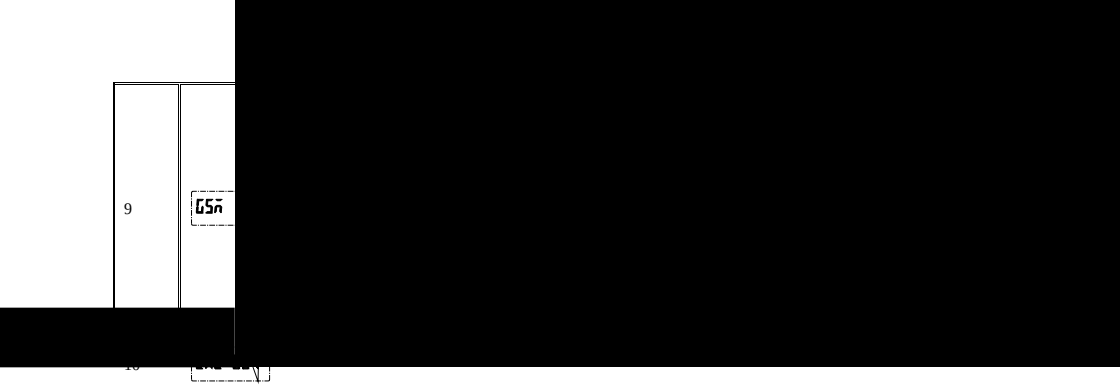
9

3.2.5 ĩ





4.1

4.5

˜ ˜	
ộ	˜ ˇ ˇ ת ṗ

4.6

ˇ Ŧ	
ˋ AC250V˜ 5A˜ ˜ ˋ DC30V˜ 5A	Ŧ ˋ Ŧ ǁ Ŧ˘ Ŧ
ˋ	

4.7

ĭ	
ˋ ˋ RS485˜ 2 ˇ ĭ	ˋ 1200bps à 2400bps à 4800bps à 9600bps ˥ ˘ 9600bps
ˆ ˋ / / Ẽ ˥	

5.1

ᒣ	ᒣ ᐱ ᓴ	ᒣ ᓂ
ᐧ Ϫ ƀ ƀ	ᐧ ˜ ʃ ᐧ	+ /- ᐧ ˋ ˜ ʒ ƀ ᒧ
ᐧ Ḥ ᐧ Ϫ ƀ ‰	ᒧ ƀ	ᒧ Ḥ ˋ ˜ ᒧ Ḥ ˋ خي شم ῤ
	ƀ ‰	Ḥ ˋ ˜ Ḥ ˋ خي شم ῤ
˜ ƀ1 1	˜ ˜	ˋ ˜ ˜ ˇ ˋ
ƀ	SIM ᐱ ˜	˜ SIM ᐱ ʊ̌ ʒ ˘
		ˋ ˋ ᒣ
		ĭ IP ä ʾ ä̈ ᐧ D خ ˋ
ھج ƀ ƀ	ʃ ᒪ و ɔ	˜ ˋ ˆ ى خي Й ˜ ᒪ ˘ ˋ ˇ
	ھج ˇ	ˋ ھج ˇ
ᐧ β ƀ ƀ		ˋ
	ĭ ƀ	شحشم ˋ ˋ β ˋ
	0 ف	Ω w̄ ɞ ᐧ ˋ Ω ĭ ˋ شم ˋ

6.1

ﺩ ﺍ ˘ ﺨﻲ Ӿ 12 ɞ ⌠ Ӿ 18 ɞ ṗ˘ ṫ ﺨﺩ ȁ ˘ ǭ Ḡ

˘ ˚ ﺳ Ɨʊ̣ ̇ Ḡ ɒ˘ ʼE ̣ ǭ ḱ Â

6.2

ɣ Ӥ Ь ǭ Ḡ ﺷﻨ

ɞ Ь ȁ ą ȁ Ữ ﺣﺲ Â



ʻشحشم Ҡ ʒ ʉ

ط ṗ ʒ ˉ ʻ 86-762-3493871 3493872 3493873

ط ʒ ˉ ʻ 86-762-3496222

ʻ 86-762-3493926 3493989 (400-830-0868)

D ʻ 86-762-3493912 3493830

ʻ 517000

http ʻ //www.yada.com.cn

E-mail ʻ market@yada.com.cn

ˇ Ḡ ẅ ℗ ≠ Â ṗ ˇ Ƀ ˆ Â