DTSD3366D-J

DTSD3366D-J Series Three - phase electronic multi - function energy meter

Instructions

Guangdong Yada Electronics Co., Ltd



Danger and warning

Before installing, operating or maintaining the equipment, please read this manual carefully, get it and gradually get familiar with the equipment. This document is not an operating manual for non-trainees, and our company are not responsible for any problems arising out of its normal use.



Risk of electric shock, fire or explosion

- **There is a power hazard in some parts of this equipment. Please operate in strict accordance with the specifications.**
- **Before maintenance and overhaul, the equipment must be powered off and grounded.**
- **All mechanical parts, doors and covers should be returned to their original position before the equipment is energized.**
- **Equipment mainten5.3( )-8Tj-235(h)16ua0d33.5(n5i21.076)-1dTD0 Tcc1.9939b088305(te8.3( )-8Tj(6-2.22r5i2(u)**

Contents

Chapter Ň Introduction **1**

Ʉ

Ŧ

Ʉ Chapter ň Installation **6**

ȁ

β

ط

ط

ط

ƀ Chapter ʼn use and operation **11**

Chapter IV Technical indicators **16**

Chapter Ň Introduction

1.1 Overview

[illegible] ˇ [illegible] طى [illegible] ˋE [illegible] طى ˋE [illegible] ๆ

[illegible] Â [illegible] ๆ Â ê Ì ä ê

Ì ä ê

ᵊᵍ	ᵛ
	◌ ᵛ ȁ ȁ ᵛ ǁ Ŧ ȁ ǁ Ŧˆ ᵛ ǁ Ŧ˜

1.4 Main function

✧ ᵛ ȁ ᵛ ȁ ǐ ᵛ ᵛ Â Ŧ ᵛ ǐ Â

✧ ᵛ Ŧ ᵛ Ň ň ᵛ ʼn Ɗ Â ᵓ Â

Ň ň ʼn Ɗ

✧ № ᵛ ᵓ № ȁ ȁ ȁ ȁ ȁ ȁ ᵛ Â

✧ ч Â

✧ Ь ᵓ ˆ ˜ Â

✧ ᵛ ȁ ᵛ ᵊᵍ ᵝ Ʉ ᵝ ᵛ ȁ ᵛ ı

ч ʻ Â Â

✧ ᵛ ᵛ Ƶ ᵛ ᵛ ᵛ ᵛ ◌ Â

✧ ᵛ ȁ ǐ ᵛ ǐ Ŧ Â

✧ ᵛ ǐ Ŧ Â

✧ ๚ № ä ä ä ä ä ä ˇ ì Ŧ Âˆ ๚ ˜

✧ ๚ ๅ Â Й Ω ◌ Й

✧

✧ ˅ ך ץ ь ׁ ч Â

Chapter Installation

2.1 Installation prevention, preparation

Please read before starting the installation

ä Â Й Â



Ɗρ γ Â Ϫ Â

Â Ϫ Â

Â ä

Â



2.2 Installation Information

β

ä ä Â β Ь0 ä ä ä

ï Â ä ä ï Â

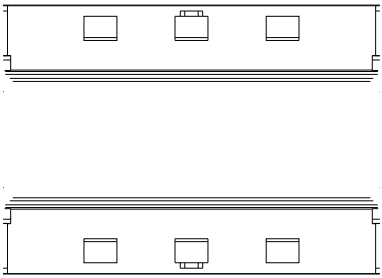

2.3 Terminal definition





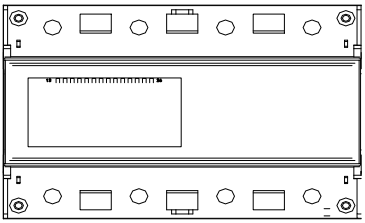

| | | |

ч ä Â

☼ ┐ ⱬ ᵝ Â ┐ γ

ΐ Ь Â ΐ ὶ

Ω γ ┐ Â

Ω

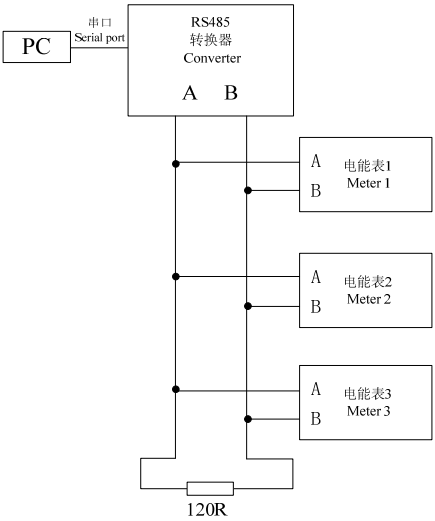

Chapter use and operation

3.1 Keys definition

4 №

















▲ ▼ ㄱ ℗ Й̧ˆ №˜ ▲ ▼

	ñAdr 001	
	表号 18014930 ㊥ Ua Ub Uc	γ β


A
150
A
Ua Ub Uc
Ia Ib Ic

	-ClrEnE-	
	-Cur rEu	
	--bACK-	
	00001	1
	L 000001	γ β
	H 000000	β
	---01---	
	t 180830	
	d 120831	

ầ ı ầ ˙

ч

Ң

β Ӽ Ҭ

h Ӽ

Ҭ Â

˙

ч

Ң

β

Ӽ Ӽ Ҭ Ӽ

Ҭ Â

Chapter IV Technical indicators

4.1 Accuracy

≤		
≤		
≤		
≤ ≤		

≤		
≤		
≤		
≤		

4.2 Specification parameters the following parameters are subject to the label on the nameplate)

4.3 Range of application

4.4 Working conditions

4.5 Consumption

	≤ ^ ~
	≤

/

Note: voltage/current exceeding the rated range of the product may cause instrument damage. Long full range applications can also cause damage to your equipment. Our company is not responsible for the accuracy change caused by overrange.

4.6 Communication

	’ ‘ ’n ˆ ˜ ’n
‖ $\mathcal{D}_P$	’ ‘ Ŋ ˆ ƀ Ŧ ˜ Ŋ
	’ ‘ ’n ˆ ˜ ’n

4.9 Timing accuracy

‘ ≤ 1 1 Â

≤

23 ±2 40 ~60 RH

9Note: the reference temperature and hu2.7(a)8.63 72-1.80 TD( )Tj/TT2 rrenn.7(n)402.7(n).7(n)8rence:atur

Chapter ŋ Maintenance and troubleshooting

5.1 Troubleshooting

ᒣ	ᒣ	ᒣ ᒪ
ᐧ Ϫ		
ᐧ ᐧᐧ Ϫ ᑲ ᑲ	ᑲ	ᐧᐧ ᐧᐧ
	ᑲ	ᐧᐧ ᐧᐧ
ᐧ β ᑲ ᑲ	ᑲ	
	ᑲ	β
	0	ᑫ ᐧ ᑫ
	ᑲ ᒣ	ᒣ

Note: If there are some problems that cannot be solved, please contact our after-sales service department in time.



Ѐ

طى

طى

Ⓟ Â Ъ Â